HYDROSHOT BASKETBALL GOAL
PRODUCT SUBMITTAL
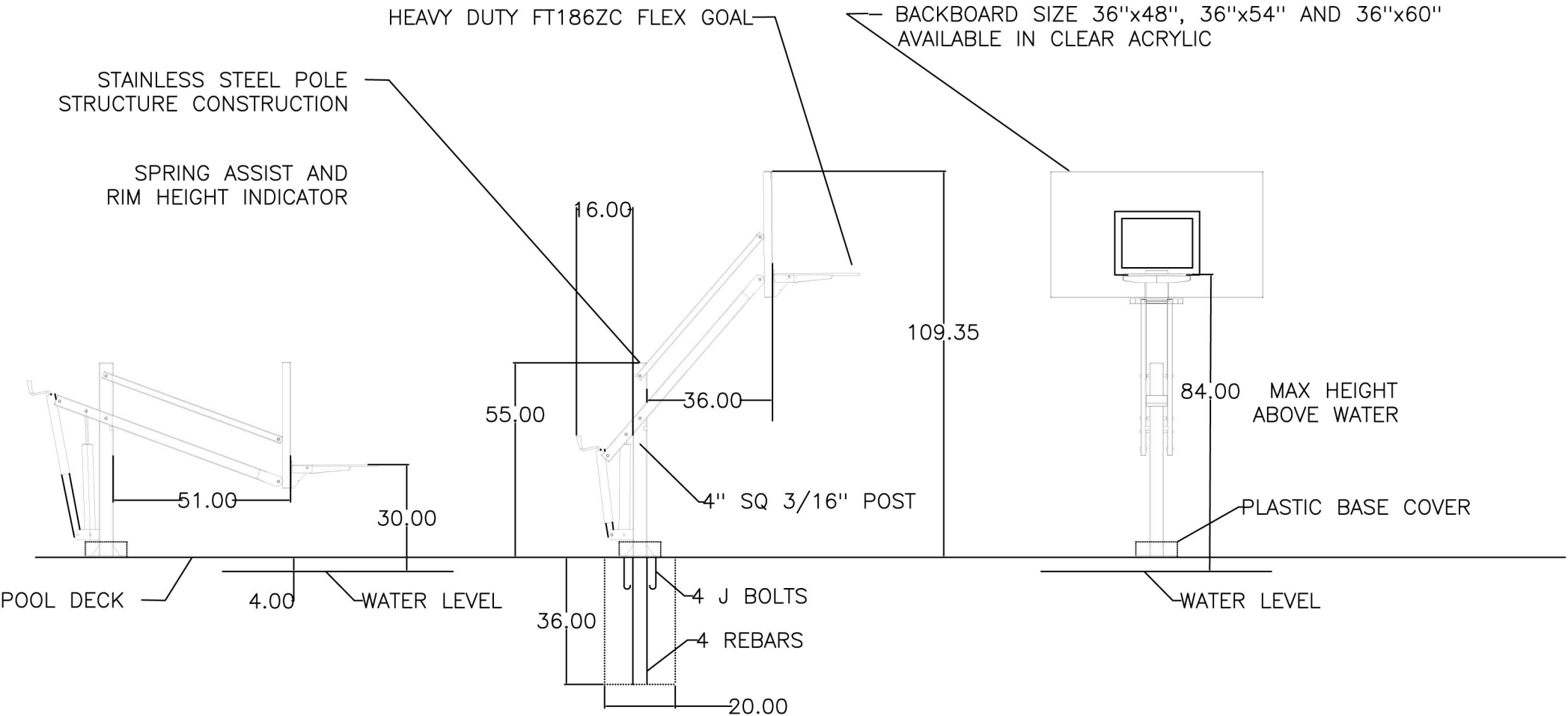
sales@dunriteplaygrounds.com
www.dunriteplaygrounds.com